# LIVE PRODUCTION GUIDELINES

WORLD TOUR
**2026**
*FEBRUARY 2026 V1*

# TABLE OF CONTENTS


GENERAL REQUIREMENTS . . . . . 3

1.1 Power, Lighting and Utilities

1.2 Television Broadcast Van Parking

1.3 Camera Positions

PRODUCTION . . . . . 4

2.1 Philosophy

2.2 Countdown to Tip-Off – Pre-Game Running Order

2.3 Overtime

2.4 Highlights Program Content

2.5 Production Plan, Terms and Conditions

2.6 Camera Production Plan

2.7 Directing Guidelines

2.8 Slow Motion Facilities

2.9 Audio Production Plan

2.10 Commentator Position and flash interviews

2.11 Video Referee Replay System

2.12 Streaming distribution

TV GRAPHICS . . . . . 12

Executive Summary . . . . . 19

Live Production Checklist . . . . . 19

This manual sets out operational responsibilities and information for broadcasters participating in the FIBA 3x3 events.

This manual should be used in together with the Rules & Regulations of the FIBA 3x3 2026, which are available here: https://fiba3x3.basketball/en/rules.html
This TV production manual prevails if in conflict with the Broadcast Partner Production Manual (and/or other manuals).

Frequently used terms
A number of terms are used frequently throughout the manual. For the sake of brevity, the following definitions apply.
OB Van – outside broadcasting van
HB – host broadcaster
SNG - satellite news gathering
LOC – local organising committee
RO – running order

# 1. GENERAL REQUIREMENTS

## 1.1 Power, Lighting and Utilities

Power, lighting, water and other utilities used within the respective venues for the broadcast and organization of the Event games shall be provided free of charge by the LOC.
When the events are played using artificial lightning, **the average maintained illumination should be minimum 1500 lux in the vertical plan** (towards the camera lens) and spread evenly on the 3x3 court floor area without any shadows or patches.
**Emergency lighting of at least 1000 lux should be available.** The switchover to emergency lighting during a power failure should be synchronous – the 1000 lux lighting should not switch off during a power failure.
Power and back-up power for the Host Broadcaster OB vans, graphics company and commentary area should be provided by the LOC.

## 1.2 Television Broadcast Van Parking

Sufficient space to form a TV compound must be provided at each Event venue by the LOC for the parking of all production vehicles, OB vans, and satellite uplink vehicle that may be required by the Host Broadcaster, Broadcast Partners and graphic companies for their transmission of the Event.
TV Compound must be fully secured with 24h/day security from when equipment is installed until work is finished.

### 1.3 Camera Positions

In order to guarantee a consistently high standard of TV coverage for the 3x3 events, FIBA has agreed that there will be **a minimum number of 5 camera positions to be used by the Host Broadcaster.**
The **World Tour Final** will be produced with **8 cameras**.

# 2. PRODUCTION

### 2.1 Philosophy

FIBA's production standard for the FIBA 3x3 productions is high definition (HD) 1080/50p or 60p. The progressive framerate is mandatory. All productions will be in 16:9. The host broadcaster (HB) must use the latest generation of digital equipment for all productions. All equipment must comply with full HD broadcast technical specifications and standards.
The standard for audio accompanying the HDTV vision is a stereo sound mix.
The International Feed produced by the Host Broadcaster (HB) should be a continuous broadcast high quality signal, with full international sound and effects of all games of the competition.
The international audio feed will be full international sound with court side effects, and English commentary.
The International Feed shall be integrated with high resolution generic event graphics in the English language.

### 2.2 Countdown to Tip-Off – Pre-Game Running Order

**The Running Orders** (ROs) will be provided by the FIBA 3x3 Producer, present on-site for the WT events.
Time-outs
In a 3x3 game there is **1 time-out** granted per team (though they are not obliged to use it), and **2 TV time-outs** are called by the referees at first dead ball after 6:59 and 3:59, with a duration of 30 seconds.
Time-outs are an integral part of the game and accepted as such.
The Host Broadcaster should provide continuous coverage of the arena during interruptions or may show brief highlights/replays.

### 2.3 Overtime

The overtime starts immediately after the end of the official time, when the score is tied and **the first team to reach two (2) points wins the game**.

## 2.4 Highlights Program Content

The Host Broadcaster will be responsible for cutting a high-quality package of game highlights to be broadcast at the end of each game.
The package shall consist of maximum 2 minutes of highlights per game including the team lists, graphics and final score of the game.
Music will be played during the match highlights.
Audio files will be provided by FIBA 3x3 Production Coordinator before the event.
Commentary microphone will remain active during match highlights play-out.
During match highlights play-out, international sound from the arena will be muted.

## 2.5 Production Plan, Terms and Conditions

The Host Broadcaster shall set up all facilities in order to be **ready four (4) hours before the Tip-Off** for testing and rehearsal.
The OB van should be able to accommodate at least seven people:
1 Director
1 Slow Motion Operator
1 Graphics Operator
1 Sound Engineer
1 Video Engineer
1 Technical Manager
1 FIBA 3x3 Producer

## 2.6 Camera Production Plan

The HB shall produce the International Feed with at least five (5) cameras for a regular Master, and eight (8) cameras for the World Tour Final.

**General camera guidelines**

The following conditions apply to all camera positions:
• cameras may not obstruct the view of any substitutes, technical staff or spectators;
• cameras must not present any safety risk for players, technical staff, spectators or broadcast personnel;
• cameras must be positioned and operated in a way that does not conflict with any local safety and security regulations;
• all cameras on court level must respect the minimum distances described in this manual, unless agreed otherwise with FIBA;
• FIBA may request a demonstration of a camera or camera system prior to first production date to confirm it conforms to FIBA 3x3 guidelines;
• all camera positions must be approved on site.

The following plan is recommended:

• **Camera 1 - Wide Shot (Main Cam)**




Located high up in the stands or on a special platform, in one of the 2 corners facing the basket, along the lateral out-of-bounds line, approximately 5 meters behind the technical table. Light camera equipped with a wide lens with full servo, on light tripod.
The placement of the main camera is crucial for the good coverage of the 3x3 games.
Please check page 17 for detailed guidelines on the main camera position.

• **Camera 2 – Hand-Held Camera**



Located under or beside the basket to shoot the game action but also able to view the substitute player, close-ups during free throws and check ball. Equipped with a wide angle lens.

• **Camera 3 - Hand-Held Camera**







Located in front of the basket, behind the advertising boards at court level to follow the game action.

- **Camera 4 – Mobile Wireless Camera with Gimbal**




Moves freely around the field of play, capturing the players' entrance, backstage shots, fans' reactions, time-out close-ups of the players, coin toss and end of game reactions.

- **Camera 5 – Mini Camera**




Remote controlled (or fixed) looking through or over the backboard, and able to move with the action. Camera should be mounted to feature the branded rim stickers in vision and it will be equipped with a wide angle lens.

- **Camera 6 – Beauty Camera (optional)**



Located in a high position, to shoot an attractive general view of the venue.
Light camera with wide angle.

• **Camera 7 – Super slow-motion Camera**



Located on the side of the court (right or left, to be decided by the director/producer), on a platform 0.5-1 meter-high, with a direct view of the basket.

• **Camera 8 – Close-up Camera**



Located next to Camera 1. Heavy camera equipped with a minimum 40x lens with full servo, on heavy tripod.

• **Other cameras (optional):** over the basket camera, slow motion cameras, reverse angle cameras, behind the scenes cameras.

**Main camera - backup**

Please make sure the Main Camera (Camera 1) is powered via UPS and the output (with 2 channels of audio embedded - international sound) of the camera (from the CCU) is provided as a cold backup for the main LiveU.
A second cable (triax or SMPTE fiber) for main camera should be installed for backup purposes.

## 2.7 Directing Guidelines

**General principles of coverage**

The following principles apply to the international game feed produced by host broadcasters, and game directors should follow the guidelines outlined below.

• The international feed must start 10 minutes before tip-off.

• Continuous coverage must be provided from the arena prior to the game, during breaks, during any prolonged interruption of the game and after the game, with the exception of the replays and additional angles shown, or FIBA 3x3 agreed promotional material.

• Each multilateral running order (MRO), examples of which are provided in the Appendix, must be followed exactly by the host broadcasters.

• Where possible, VIP shots should only be used if the personality is internationally recognizable and providing the ball is not in play. This shot will always have a lower third with the name of the VIP.

• Coverage must be kept as simple as possible throughout the game (no over cutting).

• The TV game director has to respect preserve the context and coherency of the action.

• Host broadcasters must adhere to the pitch camera guidelines described in section 2.6.

• Game directors should not be excessively influenced by commentary.

• Game directors should be sensitive to the following controversial circumstances:

– serious injuries to players; violent or abusive behaviour by players; lack of respect for match officials.

• No coverage is to be given to fireworks or flares in the crowd, or to bad crowd behaviour.

• Political banners should not be shown on the international feed, as they may compromise impartiality and could be damaging to FIBA, basketball and the tournament.

• No public order offenses or abusive behaviour (crowd disturbances, streakers, etc.) should feature on the international feed. Host broadcasters should follow the instructions of FIBA, however, if such incidents occur, as they may need to be covered to a certain extent if they have an impact on the field of play. General principles of taste, neutrality and decency should still prevail. For instance, a wide shot used purely to establish what is happening avoids giving any incident undue prominence. Nevertheless, the overriding principle remains "if in doubt, leave it out".

• In case of interruption due to bad weather, the beauty shot cam will be shown, with a lower third graphic announcing the cause and length of the interruption. The director can decide to show highlights of the previous games, but he needs to regularly inform the viewers about the status of the event.

**Game directing guidelines**

• It is recommended to use extensively the main camera when following the action.

• The action should be followed with the main camera continuously, without switching to close-ups or other angle until the action allows it.

• After scored basket, the camera showing the point continues to follow the action, in order to show to the viewers the change of possession and the offensive transition; switch when the ball has been cleared behind the arc.

*It is important to continue to follow the action with the same camera, for the viewers to better understand which team is in possession of the ball. The transition offense/defense is very fast and a switch immediately after a scored basket can create confusion. Do not cut to close-ups or public reaction immediately after a scored basket, because the other team might score in the first second of the offense, so the action needs to be followed continuously, if there is no dead ball situation.*

• The hand held camera under the basket should keep a wide angle during the action, showing close-ups or other angles in between the actions.

*This way, the hand held camera under the basket will offer a good switching option to the director.*

• Camera behind backboard, always wide-angle, to be used mainly for free-throws, check-balls, frontal actions and replays.
• At the end of the game, after displaying the final score, a game highlights sequence of 1.30-2 minutes shall be aired.
• For the Dunk Contest, the athlete should be framed entirely by the cameras 1, 2 and 3. This is needed in order to clearly see the jumps and the technique of the athlete. The other cameras can have different framings (close shots).
Each dunk should have minimum 2 replays, from different angles.

## 2.8 Slow Motion Facilities

The OB Van should have available at least 1 slow motion facility (capable of showing minimum 3 different angles).
Replays/SLOW MOTION can be asserted during time-outs, TV time-outs and during longer breaks (the TV Director can decide that). A replays sequence shall be prepared for the 2 TV time-outs (see section 2.2).

**Replay Guidelines**

• Priority should be given to the live coverage.
• Replays should only be inserted when relevant to current live action.
• The best action comes first.
• Quality takes precedence over quantity.
• There should be no spooling (replay going back and forth) during replay or highlights.
• Keep the replays moving.
• No replay should be inserted when the ball is in play.
• The FIBA 3x3 replay wipe should be used at the beginning and end of replays.
• No graphics should be inserted during replays.
• The audio follows the video in the replay machine.
• Avoid showing too many fouls, injuries, bad behaviour of the players. The selection should contain the best dunks, shots, passes, funny moments, etc.
• Whenever possible, please show as well the action which is leading to a scored basket. (e.g. the pass to the player who scores, the crossover before the dunk, the steal and the basket scored, etc.)

## 2.9 Audio Production Plan

The following plan is necessary:
• 4 ground level microphone (on each side of the court – 2 of them can be installed on the court level cameras)
• 1 microphone on the backboard (*in order to catch the rim sounds*)
• 2 microphones in the stands (*in order to catch the crowd sound*)
• 1 hand held microphone, connected to one of the court-level cameras, for the flash post-game interviews (mandatory for World Tour and Zone Cup events)
The above set-up is the minimum acceptable in a FIBA 3x3 event.

**Audio Channels setup – available for both FIBA 3x3 streaming units and SNG**
• Audio Channel 1: International Sound - (STEREO LEFT)
• Audio Channel 2: International Sound - (STEREO RIGHT)
• Audio Channel 3: English Commentary - (CLEAN)
• Audio Channel 4: English Commentary - (FULL MIX)

## 2.10 Commentator Position and flash interviews

The Host Broadcaster will provide one fully-equipped double commentary position.
The commentator position shall have a direct view to the court and shouldn't be affected by the public or the staff. Also, the commentator position needs to be protected from the sun or the rain. FIBA will bring their own commentator(s).
FIBA will provide a reporter who will conduct post game (flash) interviews in English on the court on the final day of each competition. As the interviews will take place on the court and they will be amplified on the PA system in the arena - we will need to use one hand microphone and receive the sound in the OB Van.
Please provide a fully equipped commentary position - Monitor with PGM with Graphics signal, 2x Headsets (plus 1 backup) and talkback possibility to producer position in the OB Van.

## 2.11 Video Referee Replay System

FIBA will provide their own - Instant Replay System (IRS) for the referee review. The sports supervisor is operating the machine.
The unit needs to receive the following signals in HD 1080 / SDI:

1x PGM with graphics
4x SDI - ISO cameras (decided on installation day).
2x SDI cables for two extra signals (not used for the live production)
- Scoring computer output >> Graphics position
- IRS mixer output >> OB Van multiviewer.
1x LAN (Ethernet cable) from Official Table to Graphics position for Data Aquisition.

The use of the IRS can be requested by any of the players. A graphic lower third with the title "Challenge Request" will be shown.

During the challenge request avoid to show too much the referees and the technical table. Cover the moment showing the public, the players and replays of the best action of the game.
After the referees are taking a decision, we can show the action which was challenged.

### 2.12 Streaming distribution

FIBA, through its technical provider on site will provide the main and backup links (via LiveU equipment or similar) towards the distribution point.
The units need to be supplied with an embedded HD-SDI 1080p 50/60 PGM - SDI signal with graphics and 4 channels of audio:
CH1 - International sound left
CH2 - International sound right
CH3 - FIBA commentary (clean)
CH4 - FIBA full commentary mix

### 2.13 Miscellaneous

The Host Broadcaster will provide the following outputs (HD, SDI cables):
- 1 PGM dirty for the giant screen on the court
- 1 PGM dirty for live streaming with a dedicated audio configuration (Audio: Channel 1&2 - Stereo Mix International & English commentary) (in the FIBA tent)

The Host Broadcaster will provide one master recording, PGM dirty, HD, with all the 4 audio channels, of the international feed, to be ready in the case of the need of a re-feed.

# 3. TV GRAPHICS

For the World Tour events, the TV graphics service is provided by FIBA.
The HB will allow enough space in the OB Van for the graphics operator, and the graphics machine. The graphics feed will be ingested in the feed via fill & key signals.

Technical Setup for the production of the regular **World Tour** events

5 HD camera setup (see the recommended position in the plan below)

- 16 inputs HD video-mixer with at least 1 M/E and video memory (for the replay effect)
- 8 inputs replay system
- 4 ground level microphone (on each side of the court – 2 of them can be installed on the court level cameras)
- 1 microphone on the backboard (in order to catch the rim sounds)
- 2 microphones in the stands (in order to catch the crowd sound)
- Game graphics – players and team info, game statistics, time and score
- 2 Commentators position
- Master recording: HD files, 100 Mbps, 4 channels Audio
- **Camera 1 – Wide Shot (Main Cam)**
- **Camera 2 – Hand-Held Camera**
- **Camera 3 – Hand-Held Camera**
- **Camera 4 – Mobile Wireless Camera with Gimbal**
- **Camera 5 – Mini Camera**

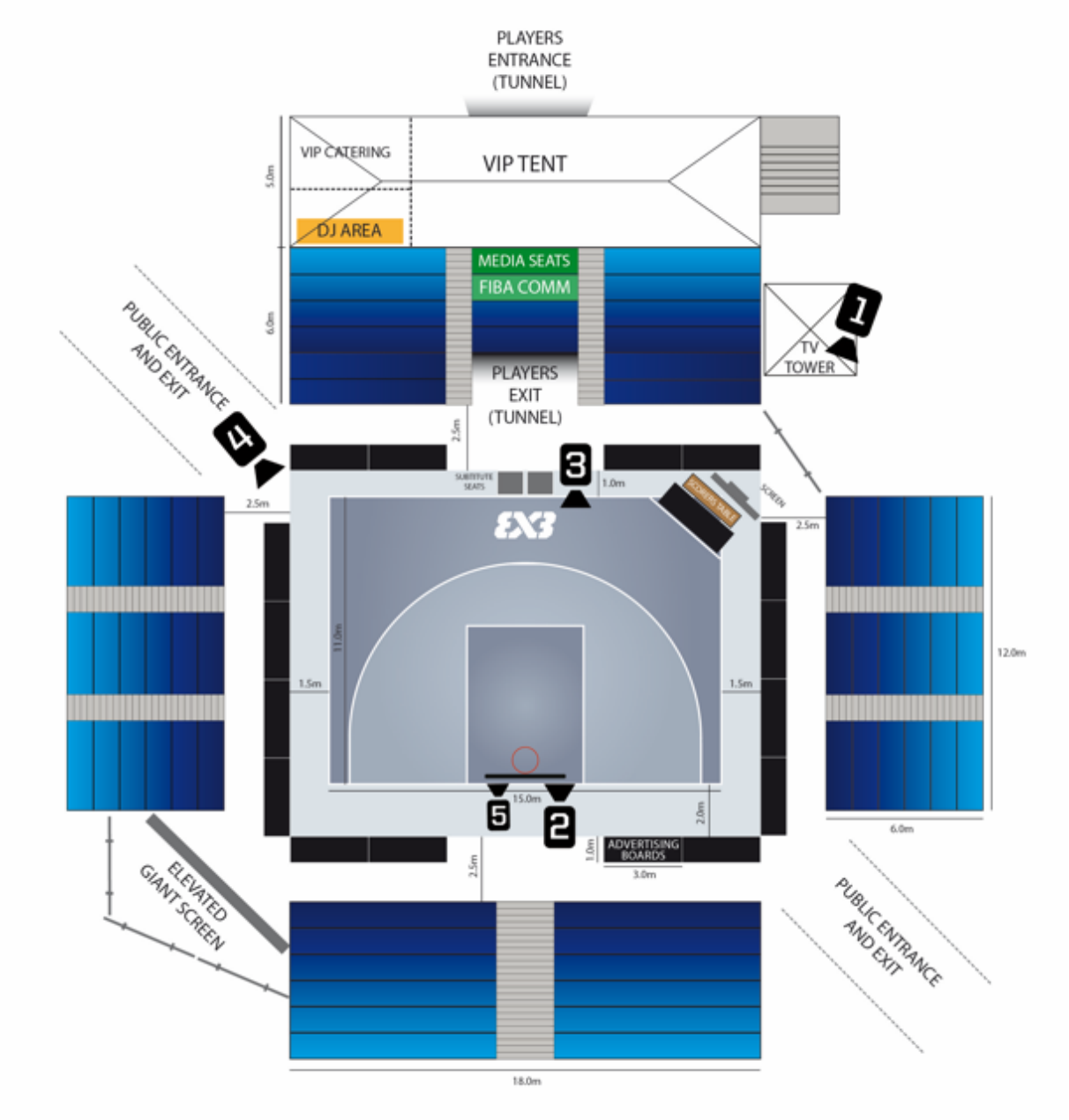
PLAYERS
ENTRANCE
(TUNNEL)
VIP CATERING
VIP TENT
DJ AREA
MEDIA SEATS
FIBA COMM
PLAYERS
EXIT
(TUNNEL)
TV
TOWER
PUBLIC ENTRANCE
AND EXIT
ELEVATED
GIANT SCREEN
ADVERTISING
BOARDS
PUBLIC ENTRANCE
AND EXIT
5.0m
6.0m
2.5m
1.0m
11.0m
1.5m
15.0m
2.0m
3.0m
12.0m
18.0m

Technical Setup for the production of the **World Tour Final** level events

- 8 HD camera setup (see the recommended position in the plan below)
- 16 inputs HD video-mixer with at least 1 M/E and video memory (for the replay effect)
- 8 inputs replay system
- separate replay system for the super slow-motion camera
- 4 ground level microphone (on each side of the court – 2 of them can be installed on the court level cameras)
- 1 microphone on the backboard (in order to catch the rim sounds)
- 2 microphones in the stands (in order to catch the crowd sound)
- Game graphics – players and team info, game statistics, time and score
- 2 Commentators position
- DSNG ready on location for the full event
- Master recording: HD files, 100 Mbps, 4 channels Audio
- **Camera 1 – Wide Shot (Main Cam)**
- **Camera 2 – Hand-Held Camera**
- **Camera 3 – Hand-Held Camera**
- **Camera 4 – Mobile Wireless Camera with Gimbal**
- **Camera 5 – Mini Camera**
- Camera 6 – Beauty Camera (optional)
- Camera 7 – Super slow-motion Camera
- Camera 8 – Close-up Camera

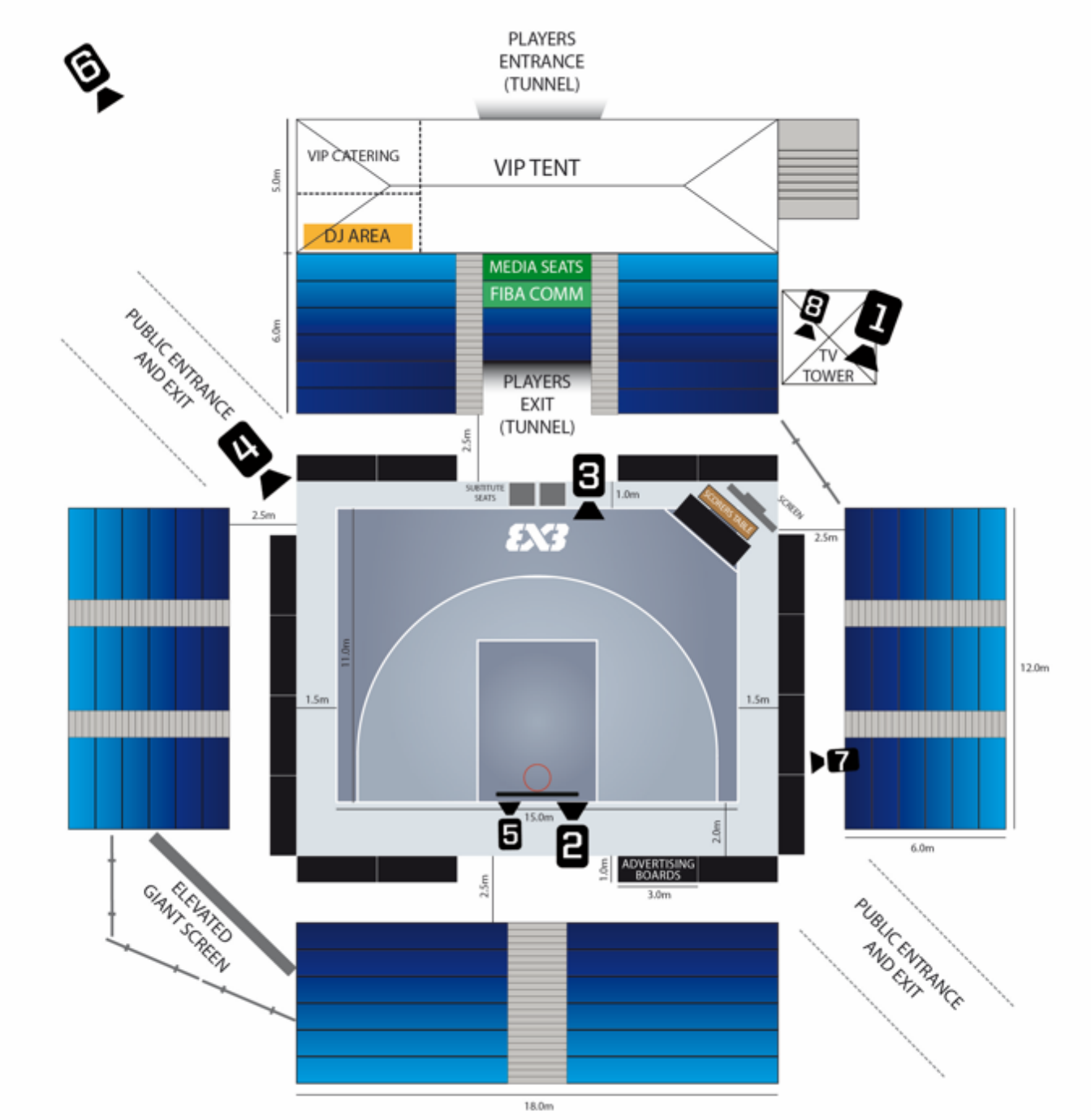
PLAYERS
ENTRANCE
(TUNNEL)
VIP CATERING
VIP TENT
DJ AREA
MEDIA SEATS
FIBA COMM
PLAYERS
EXIT
(TUNNEL)
TV
TOWER
PUBLIC ENTRANCE
AND EXIT
SUBSTITUTE
SEATS
SCORERS TABLE
SCREEN
ADVERTISING
BOARDS
ELEVATED
GIANT SCREEN
PUBLIC ENTRANCE
AND EXIT
5.0m
6.0m
2.5m
1.0m
2.5m
11.0m
1.5m
1.5m
12.0m
15.0m
2.0m
1.0m
3.0m
2.5m
6.0m
18.0m

**Main camera** position

- Make sure that there is an unobstructed line of sight from the main camera to the field of play.
- The main camera position is a priority in the general venue setup, and shouldn't be affected by spectators' seats, VIP or media spaces. Make sure that it is planned in advance, and that there is no interference with the seating for the public.
- Do not start selling tickets in the arena, before having a confirmed and approved main camera position.
- The platform for the main camera needs to be stable enough, not to be affected by the spectators' movements or reactions.
- Please follow the 2 diagrams below, to serve as guidelines for the main camera position. IMPORTANT OBSERVATION: these are just guidelines, and you need to take into consideration the specifics of each venue, when performing the installation. The exact measurements can vary, but the principles shall be respected: clear line of sight and no external interference.

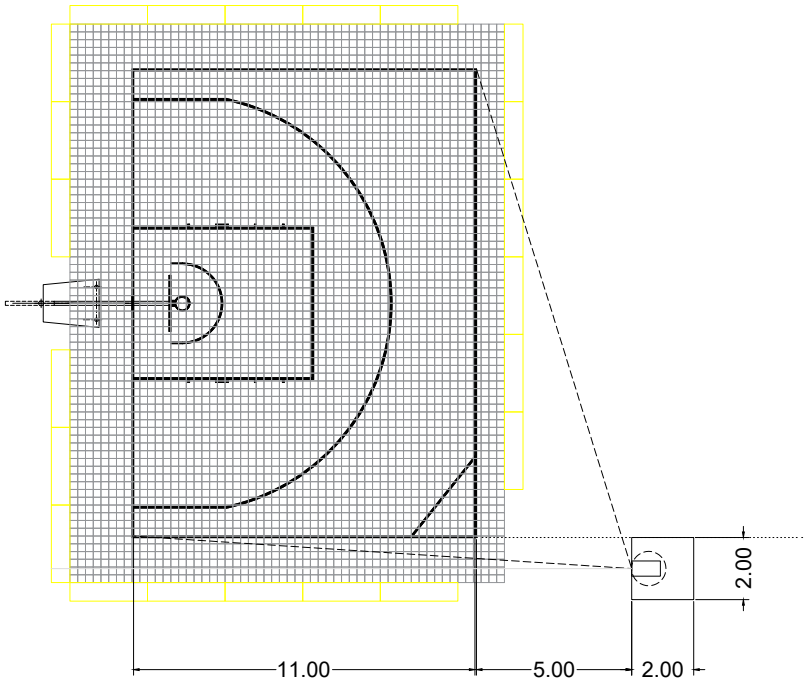
2.00
11.00
5.00
2.00

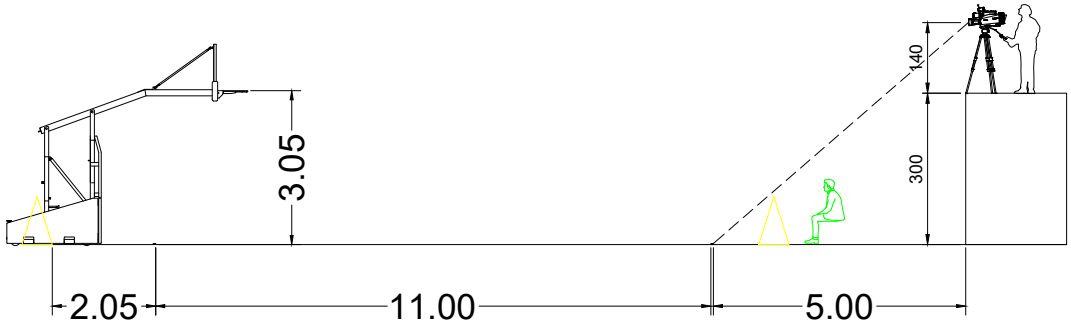
3.05
140
300
2.05
11.00
5.00

# Executive Summary

The FIBA 3x3 Live Production Guidelines for the World Tour 2026 outlines the essential production requirements and standards necessary to deliver a high-quality broadcast of the event. This document provides detailed specifications for camera placements, audio setup, TV graphics, and the technical setup for regular and final level events. It ensures uniformity and quality across all broadcasting partners and host broadcasters. Key aspects include the use of multiple camera setups, specific audio configurations, adherence to international broadcasting standards, and the integration of innovative technologies like slow motion and instant replays to enhance viewer experience.

# Live Production Checklist

General Setup

- Venue Utilities: Ensure free provision of power, lighting, water, and other utilities by the LOC.
- Emergency Lighting: Confirm availability and automatic switchover of emergency lighting to 1000 lux.

Broadcast Specifics

- TV Compound Security: Verify 24/7 security arrangements for the TV compound.
- Camera Positions: Ensure at least 5 camera positions as standard, 8 for the World Tour Final.
- Equipment Standards: All equipment must be HD 1080/50p or 60p (progressive framerate is mandatory) compliant and set up for 16:9 broadcasts.

Audio and Video Production

- International Feed: Confirm setup for continuous high-quality broadcast with full international sound.
- Graphics Integration: Ensure high resolution generic event graphics are integrated in the English language.
- Rehearsal Schedule: Set up facilities and schedule for a minimum four-hour pre-event setup for testing and rehearsal.

Technical Crew and Facilities

- Crew Requirements: Ensure staffing for director, slow motion operator, sound engineer, video engineer, technical manager, and production manager.
- OB Van Specifications: Verify that the OB van can accommodate the necessary personnel and technical requirements.
- FIBA 3x3 will provide the graphics operator and the necessary equipment.

Camera Setup

- Camera Coverage: Confirm placement and operation guidelines for all cameras including wide shots, hand-held, and mini cameras.
- Safety and Compliance: Check that all camera setups comply with local safety and security regulations and do not obstruct views or create hazards.

Audio Setup

- Microphone Placement: Arrange for ground-level and court-level microphones, including microphones on the backboard and in the stands for comprehensive audio coverage.

Game Day Operations

- Running Orders: Ensure adherence to FIBA provided running orders for pre-game and in-game operations.
- Highlight Production: Plan for post-game highlight packages and ensure capability for quick editing and broadcast.

Additional Considerations

- Video Referee System: Set up and test the instant replay system with at least 4 camera feeds. FIBA 3x3 provides the IRS system, the HB only provides the outputs.
- Live Streaming and Recording: Confirm configurations for live streaming and recording setups, ensuring all audio channels are appropriately mixed and recorded. FIBA 3x3 manages the live streaming contribution and on-site distribution.

This checklist is designed to guide production teams through the necessary steps to meet FIBA's broadcasting standards, ensuring a consistent and high-quality viewer experience across all event broadcasts.