LIVE PRODUCTION GUIDELINES

CHALLENGERS / WOMEN SERIES / NATIONS LEAGUE
ZONE AND WORLD QUALIFIERS / YOUTH EVENTS
2026
FEBRUARY 2026 V1

TABLE OF CONTENTS

USE OF THE MANUAL 3

SUMMARY 4

GENERAL REQUIREMENTS 5

1.1 Power, Lighting and Utilities

1.2 Production facilities

1.3 Camera Positions

PRODUCTION 5

2.2 Pre-Game, Game Time and Time-Outs Running Order

2.3 Overtime

2.4 Highlight Program Content

2.5 Production Plan, Terms and Conditions

2.6 Camera Production Plan

2.7 Directing Guidelines

2.9 Audio Production Plan

TV GRAPHICS 12

VIDEO FEED DELIVERY 12

USE OF THE MANUAL

This manual sets out operational responsibilities and information for broadcasters participating in the following FIBA 3x3 events: Women Series, Challengers, Nations League, Zone and World Qualifiers, Youth Events.
This manual should be used in together with the Rules & Regulations of the FIBA 3x3 2026, which are available here: https://fiba3x3.basketball/en/rules.html
This TV production manual prevails if in conflict with the Broadcast Partner Production Manual (and/or other manuals).
This manual has attached the FIBA 3x3 Graphics manual, which contains all the information required to correctly implement the FIBA 3x3 onscreen graphics.

Frequently used terms

A number of terms are used frequently throughout the manual. For the sake of brevity, the following de definitions apply.
HB – host broadcaster
LOC – local organising committee
RO – running order

SUMMARY

Production standard:

HD 50p/60p

Number of cameras:

Minimum 3 cameras for the standard events.

5 cameras for the final stages.

Live graphics:

Yes – time an score, game ID, final score, and team rosters.

Delivery standard:

SRT or RTMP

Commentator:

FIBA 3x3 will provide English commentator only for Women Series/ Zone and World Qualifiers.

In all the other events, the LOC needs to provide English commentator.

1. GENERAL REQUIREMENTS

1.1 Power, Lighting and Utilities

Power, lighting, water and other utilities used within the respective venues for the broadcast and organization of the Event games shall be provided free of charge by the LOC.
When the events are played using artificial lightning, **the average maintained illumination should be minimum 1500 lux in the vertical plan** (towards the camera lens) and spread evenly on the 3x3 court floor area without any shadows or patches.
Emergency lighting of at least 1000 lux should be available. The switchover to emergency lighting during a power failure should be synchronous – the 1000 lux lighting should not switch off during a power failure.
Power and back-up power for the Host Broadcaster needs, graphics operator and commentary area should be provided by the LOC.

1.2 Production facilities

Sufficient space to form a live production compound must be provided at each Event venue by the LOC.
The live production area must be fully secured with 24h/day security from when the equipment is installed until the work is finished.

1.3 Camera Positions

In order to guarantee a consistently high standard of live coverage for the Challengers, Women Series and Nations League events, FIBA has agreed that there needs to be **a minimum number of 3 camera positions to be used by the Host Broadcaster.**

2. PRODUCTION

2.1 Philosophy

FIBA's production standard for the FIBA 3x3 productions is high definition (HD) **1080/50p** or **60p**. The progressive framerate is mandatory. All productions will be in 16:9. The host broadcaster (HB) must use the latest generation of digital equipment for all productions. All the equipment must comply with full HD broadcast technical specifications and standards. The standard for audio accompanying the HD video is a stereo sound mix.

The video feed produced by the Host Broadcaster (HB) should be a continuous broadcast high quality signal, with full international sound and effects of all games of the competition.
The video feed will start **5 minutes before the Tip-Off** and **up to 5 minutes after the final whistle.**
The international audio feed will be full international sound with court side effects, and English commentary.
The video feed shall be integrated with HD generic event graphics in the English language.

2.2 Pre-Game, Game Time and Time-Outs Running Order

• pre-game
Graphics: game ID (Team A vs Team B and rosters)
• during game time
Graphics: live score and time
• fulltime
Graphics: final score

Time-outs
In a 3x3 game there is **1 time-out** granted per team (though they are not obliged to use it), and **2 TV time-outs** are called by the referees at first dead ball after 6:59 and 3:59, with a duration of 30 seconds.
Time-outs are an integral part of the game and accepted as such.
The Host Broadcaster should provide continuous coverage of the arena during interruptions or may show brief highlights/replays.

2.3 Overtime

The overtime starts immediately after the end of the official time, when the score is tied and **the first team to reach two (2) points wins the game**.

2.4 Highlight Program Content

The Host Broadcaster will be responsible for cutting a high-quality package of game highlights to be broadcast at the end of each game.
The package shall consist of 2 minutes of highlights per game including the team lists, graphics and final score of the game.

2.5 Production Plan, Terms and Conditions

The Host Broadcaster shall set up all facilities in order to be **ready three (3) hours before the Tip-Off** for testing and rehearsal.
The live production crew should consist of minimum:
1 Director
1 Replays Operator
1 Graphics Operator
1 Sound Engineer

1 Video Engineer
1 Production Manager
3 Camera Operators

2.6 Camera Production Plan

The HB shall produce the International Feed with at least three (3) cameras for the standard events and five (5) cameras for the final stages (Women Series Final and World Cup Qualifiers).

General camera guidelines

The following conditions apply to all camera positions:
• cameras may not obstruct the view of any substitutes, technical staff or spectators;
• cameras must not present any safety risk for players, technical staff, spectators or broadcast personnel;
• cameras must be positioned and operated in a way that does not conflict with any local safety and security regulations;
• all cameras on court level must respect the minimum distances described in this manual, unless agreed otherwise with FIBA;
• FIBA may request a demonstration of a camera or camera system prior to first production date to confirm it conforms to FIBA 3x3 guidelines;
• all camera positions must be approved on site.

The following plan is recommended:
• **Camera 1 - Wide Shot (Main Cam)**



Located high up in the stands or on a special platform, in one of the 2 corners facing the basket, along the lateral out-of-bounds line, approximately 5 meters behind the technical table. Light camera equipped with a wide lens with full servo, on light tripod.
The placement of the main camera is crucial for the good coverage of the 3x3 games.
Please check page 17 for detailed guidelines on the main camera position.

• **Camera 2 – Hand-Held Camera**



Located under or beside the basket to shoot the game action but also able to view the substitute player, close-ups during free throws and check ball. Equipped with a wide angle lens.

• **Camera 3 - Hand-Held Camera**



Located in front of the basket, behind the advertising boards at court level to follow the game action.

OPTIONAL CAMERAS

• **Mobile Wireless Camera with Gimbal**



Moves freely around the field of play, capturing the players' entrance, backstage shots, fans' reactions, time-out close-ups of the players, coin toss and end of game reactions.

• **Mini Camera**



Fixed camera looking through or over the backboard. Camera should be mounted to feature the branded rim stickers in the frame and it will be equipped with a wide angle lens.

• **Super slow-motion Camera**



Located on the side of the court (right or left, to be decided by the director/producer), on a platform 0.5-1 meter-high, with a direct view of the basket.

• **Beauty Camera**



Located in a high position, to shoot an attractive general view of the venue.
Light camera with wide angle.

2.7 Directing Guidelines

General principles of coverage

The following principles apply to the international game feed produced by host broadcasters, and game directors should follow the guidelines outlined below.

• The international feed must start 5 minutes before tip-off.

• Continuous coverage must be provided from the arena prior to the game, during breaks, during any prolonged interruption of the game and after the game, with the exception of the replays and additional angles shown, or FIBA 3x3 agreed promotional material.

• Each multilateral running order (MRO), examples of which are provided in the Appendix, must be followed exactly by the host broadcasters.

• Where possible, VIP shots should only be used if the personality is internationally recognizable and providing the ball is not in play. This shot will always have a lower third with the name of the VIP.

• Coverage must be kept as simple as possible throughout the game (no over cutting).

• The TV game director has to respect preserve the context and coherency of the action.

• Host broadcasters must adhere to the pitch camera guidelines described in section 2.6.

• Game directors should not be excessively influenced by commentary.

• Game directors should be sensitive to the following controversial circumstances:
-serious injuries to players; violent or abusive behaviour by players;
-lack of respect for match officials.

• No coverage is to be given to fireworks or flares in the crowd, or to bad crowd behaviour.

• Political banners should not be shown on the international feed, as they may compromise impartiality and could be damaging to FIBA, basketball and the tournament.

• No public order offenses or abusive behaviour (crowd disturbances, strikers, etc.) should feature on the international feed. Host broadcasters should follow the instructions of FIBA, however, if such incidents occur, as they may need to be covered to a certain extent if they have an impact on the field of play. General principles of taste, neutrality and decency should still prevail. For instance, a wide shot used purely to establish what is happening avoids giving any incident undue prominence. Nevertheless, the overriding principle remains “if in doubt, leave it out”.

• In case of interruption due to bad weather, the beauty shot cam will be shown, with a lower third graphic announcing the cause and length of the interruption. The director can decide to show highlights of the previous games, but he needs to regularly inform the viewers about the status of the event.

Game directing guidelines

• It is recommended to use extensively the main camera when following the action.

• If the venue does not allow the placement of the crane in the recommended location, the crane will not be used to follow the action. It will show mainly beauty shots and public.

• The action should be followed with the main camera continuously, without switching to close-ups or other angle until the action allows it.

• After scored basket, the camera showing the point continues to follow the action, in order to show to the viewers the change of possession and the offensive transition; switch when the ball has been cleared behind the arc.

It is important to continue to follow the action with the same camera, for the viewers to better understand which team is in possession of the ball. The transition offense/defense is very fast and a switch immediately after a scored basket can create confusion. Do not cut to close-ups or public reaction immediately after a scored basket, because the other team might score in the first second of the offense, so the action needs to be followed continuously, if there is no dead ball situation.

• The hand held camera under the basket should keep a wide angle during the action, showing close-ups or other angles in between the actions.

This way, the hand held camera under the basket will offer a good switching option to the director.

• Camera behind backboard, always wide-angle, to be used mainly for free-throws, check-balls, frontal actions and replays.
• At the end of the game, after displaying the final score, a game highlights sequence of 1.30-2 minutes shall be aired.
• For the Dunk Contest, the athlete should be framed entirely by the cameras 1, 2 and 3. This is needed in order to clearly see the jumps and the technique of the athlete.
The other cameras can have different framings (close shots).
Each dunk should have minimum 2 replays, from different angles.

Replay Guidelines

• Priority should be given to the live coverage.
• Replays should only be inserted when relevant to current live action.
• The best action comes first.
• Quality takes precedence over quantity.
• There should be no spooling (replay going back and forth) during replay or highlights.
• Keep the replays moving.
• No replay should be inserted when the ball is in play.
• The FIBA 3x3 replay wipe should be used at the beginning and end of replays.
• No graphics should be inserted during replays.
• The audio follows the video in the replay machine.
• Avoid showing too many fouls, injuries, bad behaviour of the players. The selection should contain the best dunks, shots, passes, funny moments, etc.
• Whenever possible, please show as well the action which is leading to a scored basket. (e.g. the pass to the player who scores, the crossover before the dunk, the steal and the basket scored, etc.)

2.9 Audio Production Plan

The following plan is necessary:
• 4 ground level microphone (on each side of the court – 2 of them can be installed on the court level cameras)
• 1 microphone on the backboard (*in order to catch the rim sounds*)
• 2 microphones in the stands (*in order to catch the crowd sound*).

3. TV GRAPHICS

- The TV graphics are the game information data provided to the Host Broadcaster. The graphic elements have been designed in harmony with the FIBA Corporate Identity guidelines and the Event "look".
- **It is vital that the time on the game clock is the same as the time displayed on the TV graphics.** In order to ensure this, the scouting set-up and personnel must use the time of the game clock.
  In order to insure the best viewing experience, the main camera should keep in frame the official scoreboard of the venue.
- The generic graphics information shall include:

Event title, groups information, game, venue, team line ups, player name and number
Permanent score insert with remaining time

- FIBA 3x3 will also provide a graphic wipe transition to be used as an "in" and "out" for all the replays shown.
- The TV Graphics templates and wipe are delivered together with a Graphics Manual, which will be used together with the present one.

Graphics Usage Recommendations
• Show the name of the player, when stepping into the court, during the opening presentation.
• **Do not** insert any graphics or stats during SLOW MOTION replays.
• **Always** mention the name of the player + points scored if available, **on free throws.**
• The "light" team line-up must appear first, then the "dark" one.
• The official international language of FIBA 3x3 graphics will be English.

4. VIDEO FEED DELIVERY

• Please deliver the video feed via SRT (recommended) or RTMP.
• The video feed resolution required is 1080p50/60.
• The recommended bitrate range for the video should be between 10.000 and 12.000 Kbps (for 1080p50/60).
• The video codec required is H.264 4.2 high (for 1080p50/60).
• The recommended keyframe frequency is 2 seconds, and it should not exceed 4 seconds (or a GOP size of 100).

• For optimal results, the recommended bitrate encoding is CBR.
• When it comes to audio, we kindly request that you use AAC/MP3 audio codec with a minimum bitrate of 192kbps.
• Moreover, please note that ensuring a smooth stream is of great importance, especially when using 4G/5G Internet routers. Therefore, it is crucial to have the internet bandwidth guaranteed by the internet provider.

Technical Setup for the production of the **Challenger/Zone Cup Qualifiers/Women's Series/Nations League** level events

- 3 HD camera setup (see the recommended position in the plan below)
- 6 inputs HD mixer
- 4 ground level microphone (on each side of the court – 2 of them can be installed on the court level cameras)
- 1 microphone on the backboard (in order to catch the rim sounds)
- 2 microphones in the stands (in order to catch the crowd sound)
- Game graphics – time and score, final score, team names, players' names
- English language commentator (if not specified differently)
- Master recording: HD files, 50 Mbps, 2 channels Audio
- **Camera 1 – Wide Shot (Main Cam)**
- **Camera 2 – Hand-Held Camera**
- **Camera 3 – Hand-Held Camera**

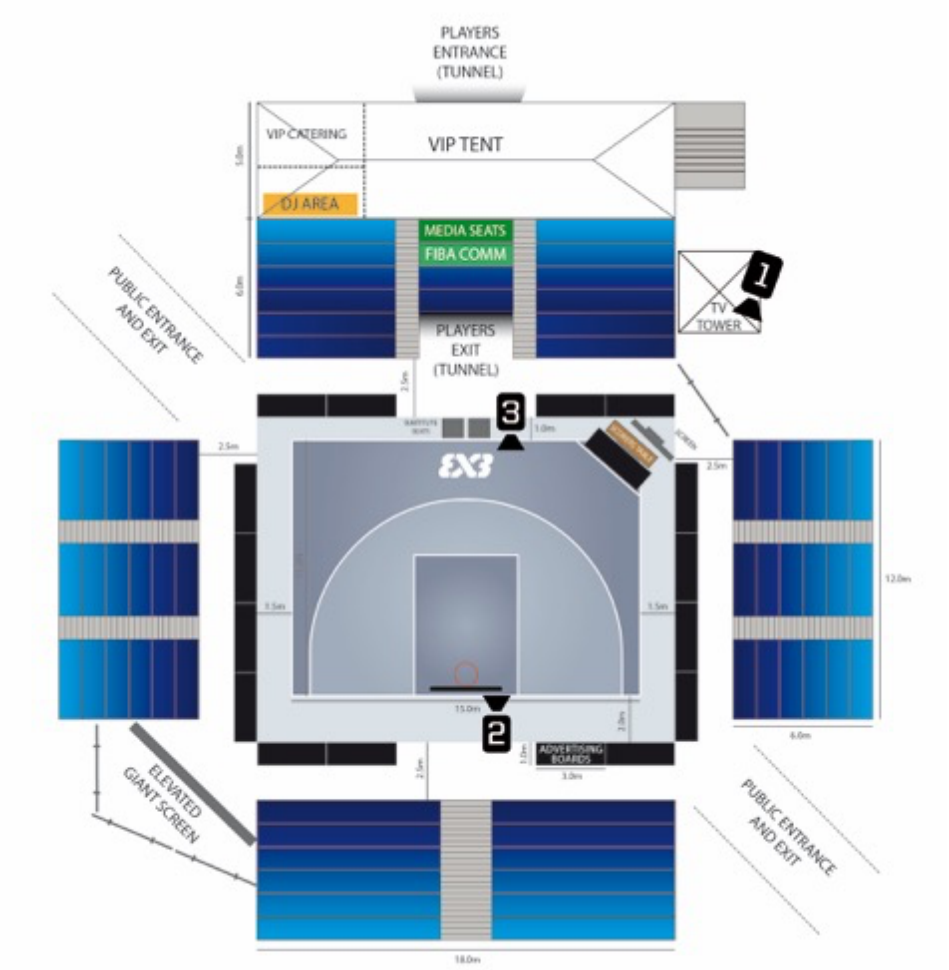

Technical Setup for the production of the **Women Series Final and World Cup Qualifiers**

5 HD camera setup, including a mini camera installed on the backboard (see the recommended position in the plan below)

- 16 inputs HD video-mixer with at least 1 M/E and video memory (for the replay effect)
- 4 inputs replay system
- 4 ground level microphone (on each side of the court – 2 of them can be installed on the court level cameras)
- 1 microphone on the backboard (in order to catch the rim sounds)
- 2 microphones in the stands (in order to catch the crowd sound)
- Game graphics – players and team info, game statistics, time and score
- 2 Commentators position
- Master recording: HD files, 100 Mbps, 4 channels Audio
- **Camera 1 – Wide Shot (Main Cam)**
- **Camera 2 – Hand-Held Camera**
- **Camera 3 – Hand-Held Camera**
- **Camera 4 – Superslomo camera**
- **Camera 5 – Mini Camera**

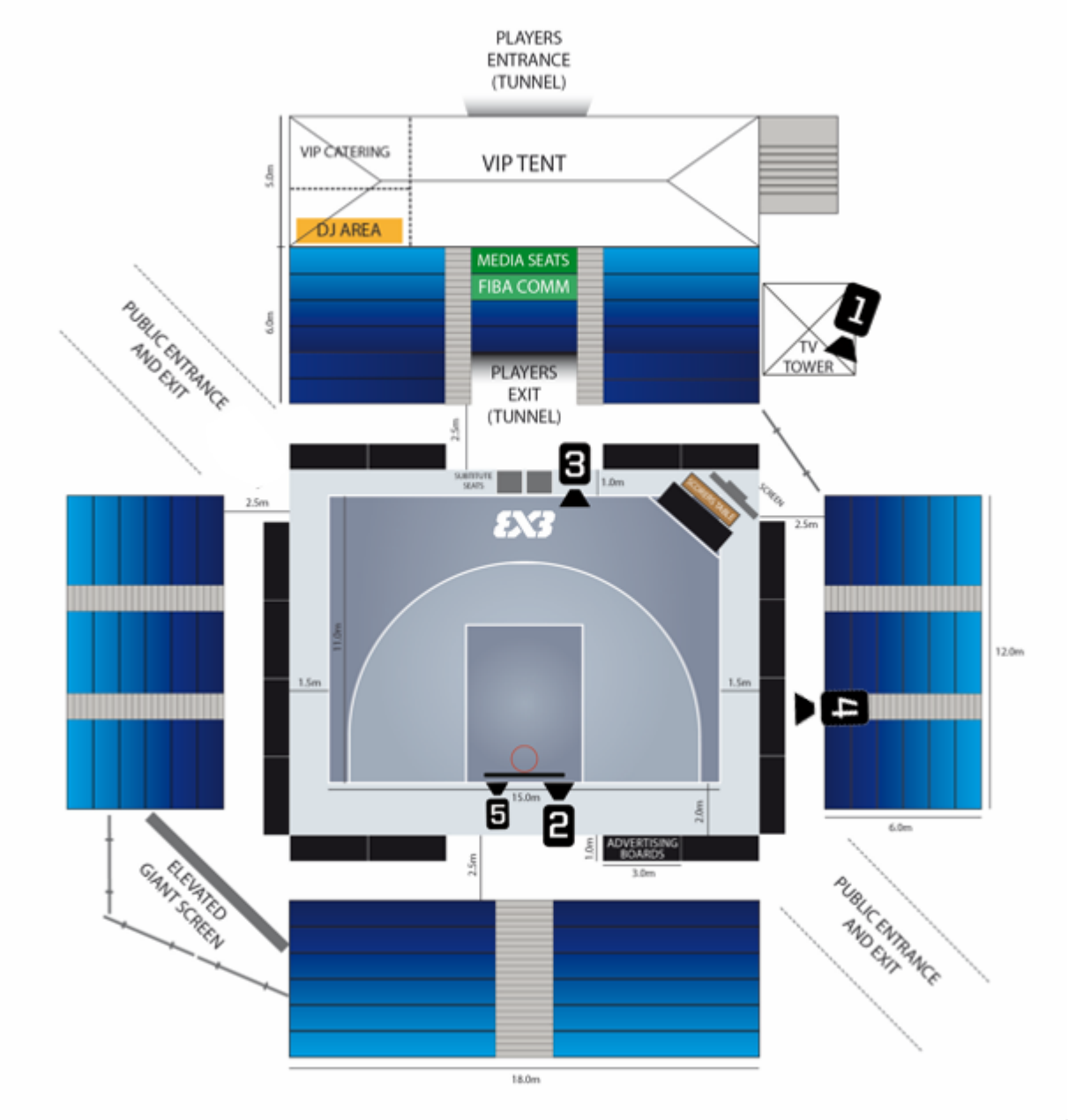
PLAYERS
ENTRANCE
(TUNNEL)
VIP CATERING
VIP TENT
DJ AREA
MEDIA SEATS
FIBA COMM
PLAYERS
EXIT
(TUNNEL)
TV
TOWER
PUBLIC ENTRANCE
AND EXIT
ELEVATED
GIANT SCREEN
PUBLIC ENTRANCE
AND EXIT
ADVERTISING
BOARDS
18.0m
12.0m
6.0m

Main camera position

- Make sure that there is an unobstructed line of sight from the main camera to the field of play.
- The main camera position is a priority in the general venue setup, and shouldn't be affected by spectators' seats, VIP or media spaces. Make sure that it is planned in advance, and that there is no interference with the seating for the public.
- Do not start selling tickets in the arena, before having a confirmed and approved main camera position.
- The platform for the main camera needs to be stable enough, not to be affected by the spectators' movements or reactions.
- Please follow the 2 diagrams below, to serve as guidelines for the main camera position. IMPORTANT OBSERVATION: these are just guidelines, and you need to take into consideration the specifics of each venue, when performing the installation. The exact measurements can vary, but the principles shall be respected: clear line of sight and no external interference.

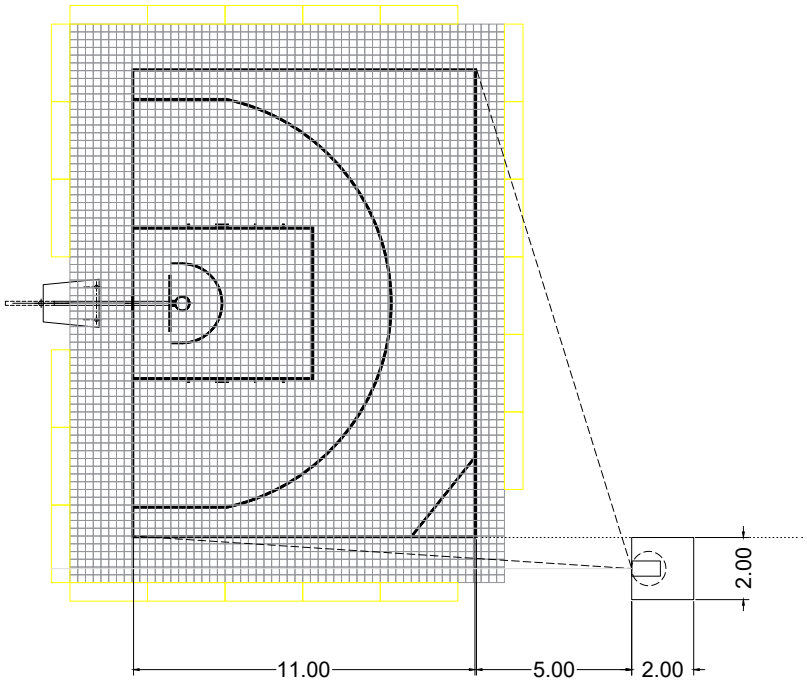
2.00
11.00
5.00
2.00

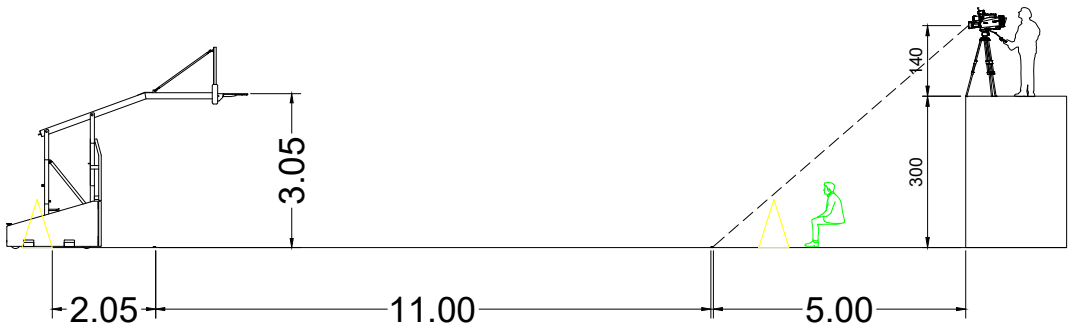
3.05
140
300
2.05
11.00
5.00